Priorities of Service Providers for DWDM Networks of the Future.

By Vladimir Kozlov and Roy Rubenstein

December 2022

More bandwidth

Less electro-optical conversion

Table of Contents

Abstract ***2***

Introduction ***3***

In summary: **5**

Section 1: Evolution of DWDM transport: automation, flexibility, higher data rates and wider spectrum. ***6***

OXCs and ROADMs **6**

Higher data rates and C+L band **8**

Pluggable DWDM optics **11**

Section 2: 400G ZR/ZR+ and IP-over-DWDM ***12***

400ZR/ZR+ coherent pluggables **13**

IP over DWDM **15**

What CSPs want **17**

In summary: ***19***

Abstract

DWDM has emerged as the dominant technology for optical networking over the last 2-3 decades. It enabled Communication Service Providers (CSPs) to increase the bandwidth of their networking infrastructure, while optimizing the cost of deploying and operating the optical transport equipment.

Current priorities of CSPs focus on deployments of DWDM in metro and access networks, where traffic growth is the highest. They are looking for ways to improve their network's flexibility using ROADMs and OXCs, while also deploying higher speed transmission systems. In the last 2-3 years, automation of network management became their top priority. It is critical for reducing the operating cost and for the provisioning of new services.

Findings of this report are based on more than 20 interviews with leading telecom CSPs and Cloud companies in China, Europe, Japan and North America, conducted by the LightCounting team over the last six months.

Introduction

Every happy family is the same, but each unhappy one has a different story. The opinions of telecom service providers vary, but there is some consensus on what needs to be done next. It is not a very happy family. The future seems to hold more challenges than opportunities, yet it is not all doom and gloom.

Telecom communication service providers (CSPs) are proud of how their networks held up during the pandemic and for a good reason. Connectivity is rapidly becoming the most essential utility service of the 21st century. Yet, few CSPs are content with being considered a utility company, their aspirations are to compete with or at least partner with the Cloud companies in providing cloud services to businesses and consumers, reigniting their revenue growth.

The flat revenues and capex of CSPs could have appeared a lot more rewarding if they were not compared directly to the skyrocketing financials reported by the Cloud companies, illustrated in Figure E-1. The most frustrating part is that the Cloud companies rely heavily on the telecom's networks, yet are not paying much for it. European CSPs are the most vocal and proactive about this situation, widening the geopolitical divide between the US and Europe.

Figure E-1: Capex of Top 15 CSPs and ICPs (or Cloud companies)

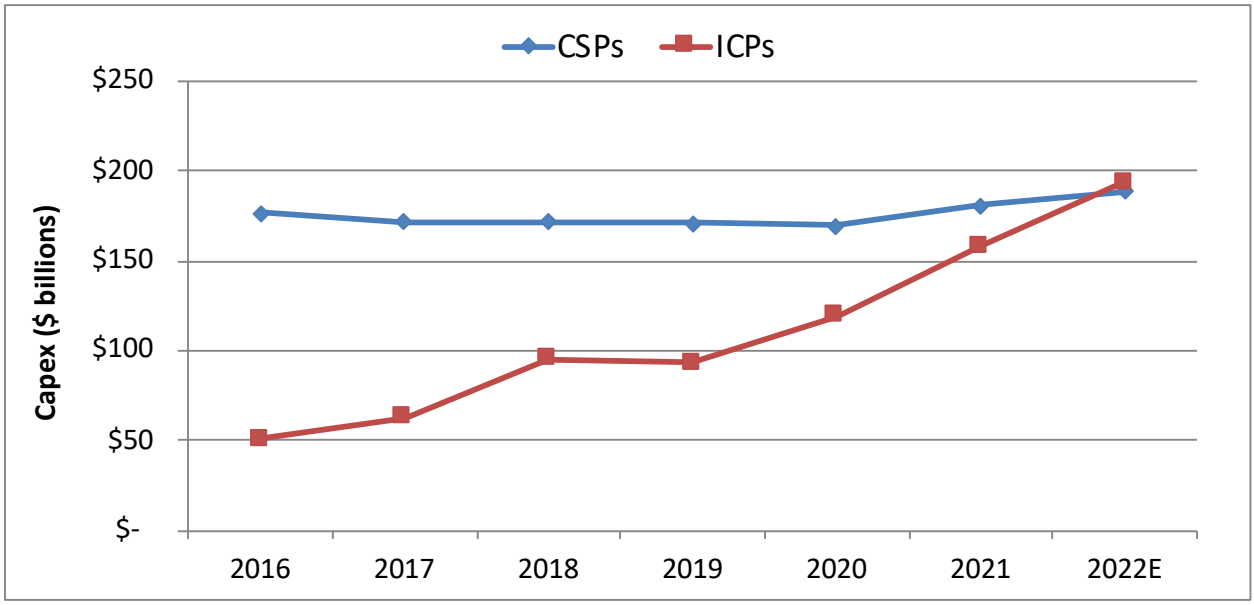

Source: LightCounting

While the business development of CSPs is focused on reigniting revenue growth, the network planners have to prioritize cost reductions and deploy more bandwidth every year while staying within the fixed capex budget. Several CSPs have embarked on the path of replicating the supply chain practices of Cloud companies, using disaggregated hardware and open-source software. Not all of these practices turned out to be suitable for the telecom operators, yet much progress

has been made adding some interoperability to solutions developed by different system vendors. Network function virtualization (NFV), open APIs and optical line systems (OLS), ROADMs and pluggable DWDM transceivers were certainly the main developments deployed by the CSPs over the last 5 years.

Yet, not all innovations by the Cloud companies were suitable for the telecom networks:

- Software defined networks (SDNs) has yet to become a reality
- White-box hardware is not the right solution for DWDM transport.

The problem is that telecom networks are a lot more complex compared to the networks run by Cloud companies. CSPs often have legacy networks, running alongside the modern coherent DWDM transport, MPLS, OTN and IP layers. Some of the legacy networks are being replaced by new ones, but many more will be running for the rest of this decade if not longer. Operation of telecom networks requires a variety of software solutions, which are hard to unify.

Cloud companies have deep resources, including hardware designers and software engineers. They are well equipped to design white box hardware and to develop open-source software for it internally. Telecom CSPs are not geared up for this task. AT&T has developed a disaggregated core router, but this remains a singular success story so far.

Any radical transformation of existing telecom networks requires huge resources, which are not available to CSPs. In this situation, telecom networks are more likely to adopt incremental improvement and step by step innovation, that match the CSPs financial and technical capabilities. NVF, OLS, ROADMs and pluggable DWDM optics are examples of such innovations.

Availability of 400ZR/ZR+ QSFP-DD coherent DWDM transceivers makes it possible to deploy them directly on IP core routers (IP over DWDM). Amazon and Microsoft started high-volume deployments of these modules in their switches and routers in their DCI networks. Telecom CSPs are also interested in this technology, but none of them is planning for wide use of IP over DWDM.

Collapsing a complex multi-layer network to a single layer all IP network would be fantastic, yet it is another example of a radical transformation that none of CSPs will be able to manage and afford.

An evolutionary (step-by-step) approach to upgrades of DWDM networks is preferred by all the CSPs, interviewed by LightCounting. Equipment suppliers offering more disruptive approaches such as collapsing all the network layers on to a single IP network are unlikely to succeed in the telecom market. Figure E-2 illustrates the main directions for step-by-step innovation in DWDM networks.

Figure E-2: Evolution of DWDM optical transport systems

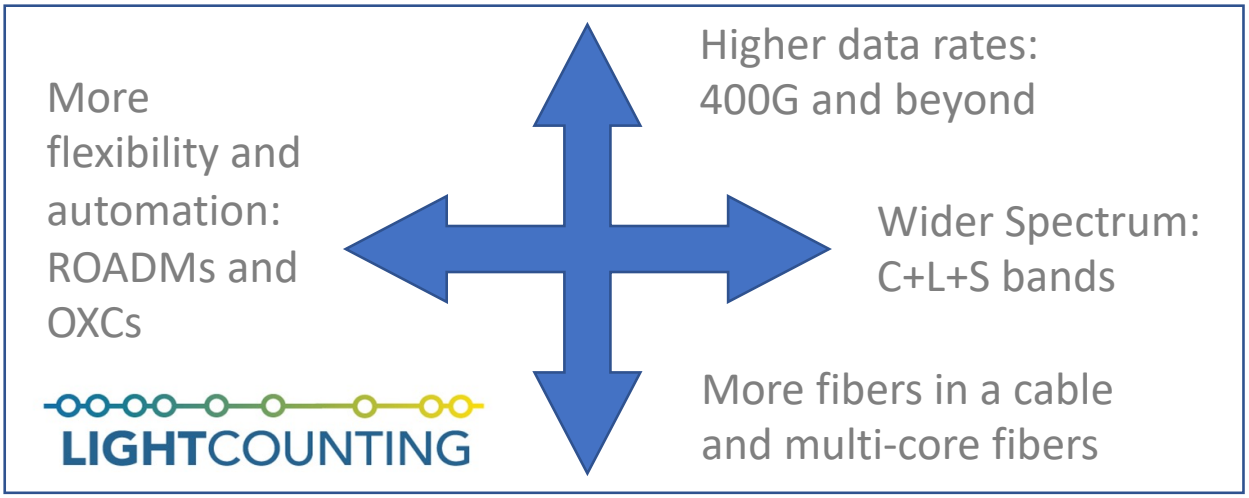

Source: LightCounting

In summary:

- Network flexibility and automation is the top priority for the service providers in China, Europe, Japan and North America, interviewed by LightCounting.
- Metro and access networks will require the most upgrades to keep up with traffic growth.
- CSPs will continue to rely on higher data rate systems to improve cost and power consumption efficiency of their future DWDM systems.
- Deployments of high fiber count cables and use of C+L bands are also important. Use of multi-core fibers will be limited to sub-marine systems.
- Reducing network power consumption is becoming as important as reducing cost, particularly in Europe.

Section 1: Evolution of DWDM transport: automation, flexibility, higher data rates and wider spectrum.

Deployments of DWDM systems started with submarine and long haul (LH) or regional networks more than 30 years ago. By now DWDM technology is used widely in metro and even access networks to support FTTx deployments

Keeping up with data traffic growth in metro and access networks is emerging as the key priority for CSPs. Growth rates of data traffic in metro networks ranges from 25-40%, while traffic in long distance (backbone) networks increases by only 5-15%, annually. Most of the DWDM equipment deployed this year will be used in metro networks and their share will continue to increase.

The network traffic is becoming more localized. Wei Leping of China Telecom mentioned in his presentation at Optinet China in August 2022, that 90% of the network traffic does not even reach the backbone (LH) network. It is mostly East-West (or metro and access) traffic which is growing. Investing into Metro DWDM networks is the top priority of all service providers, interviewed by LightCounting for this study.

Access networks started deploying 10G PON in FTTx networks and 10/25G optics in wireless fronthaul (WFH). These systems will be upgraded to 25G and 50G PON in FTTx and 50/100G in WFH in the next 3-5 years, requiring deployments of 100/200G and even 400G DWDM in metro networks.

Some metro networks already use DWDM rings and mesh topologies. Complexity of these networks is expected to increase over the next 5 years. Efficient operation of these complex network topologies requires deployments of OXCs and ROADMs, supported by automated network management systems.

OXCs and ROADMs

Figure 1-1 illustrates the evolution of DWDM network architecture and in the design of ROADMs, including an optical cross-connect (OXC) introduced by Huawei recently. An OXC combines all the functions of a ROADM with an optical back-plane to simplify fiber management. OXCs and ROADMs are critical for adding flexibility to DWDM networks, as these become more complex and use an increasing number of channels in C+ and C+L bands.

Figure 1-1: Evolution of DWDM networks and ROADMs

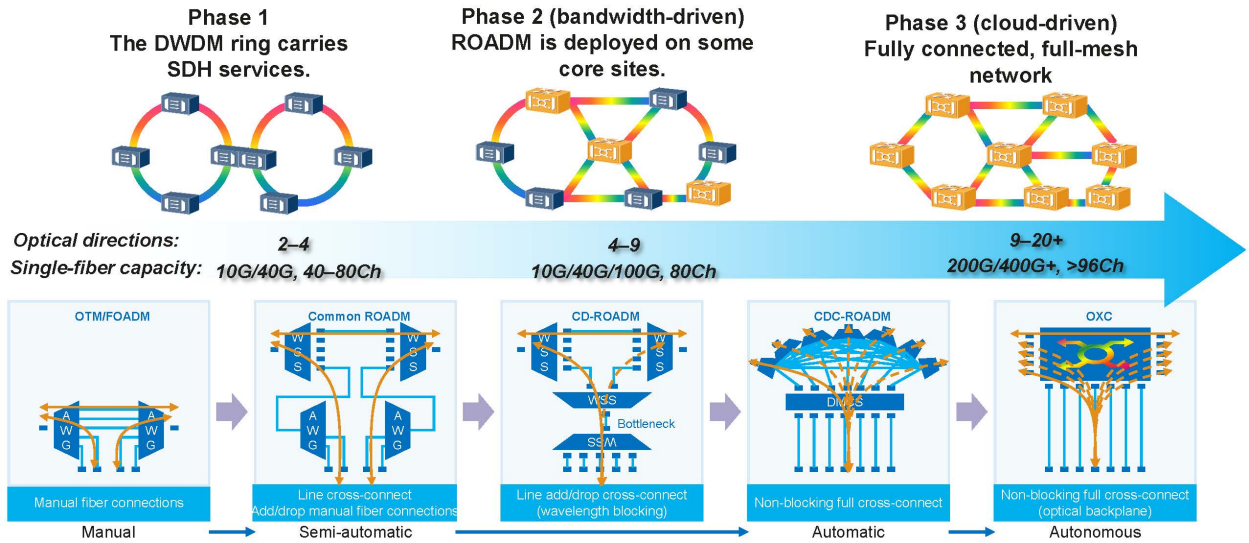

Source: Huawei

Another key advantage of networks equipped with OXCs and ROADMs is lower latency, power consumption and cost. Keeping network traffic in the optical domain reduces electro-optical conversion, reducing cost and power consumption. By-passing IP routers with deep memory buffers reduces the latency of the connections. Improvements in latency are particularly critical and metro and access networks, connecting cloud data centers with the end users, shown in Figure 1-2.

Verizon was among the first CSPs to deploy ROADMs in metro networks and it is becoming a trend globally. Huawei recently introduced its OptiX Alps-WDM, based on OXCs designed for metro and access networks. It is based on chip-level integrated optics to reduce the product cost, while maintaining high functionality. Deployment of OptiX Alps-WDM enables a significant reduction in the latency of connections between an end user and a Cloud data center: “One hop to Cloud”.

Figure 1-2: ROADMs will play a key role in Verizon's edge connect network

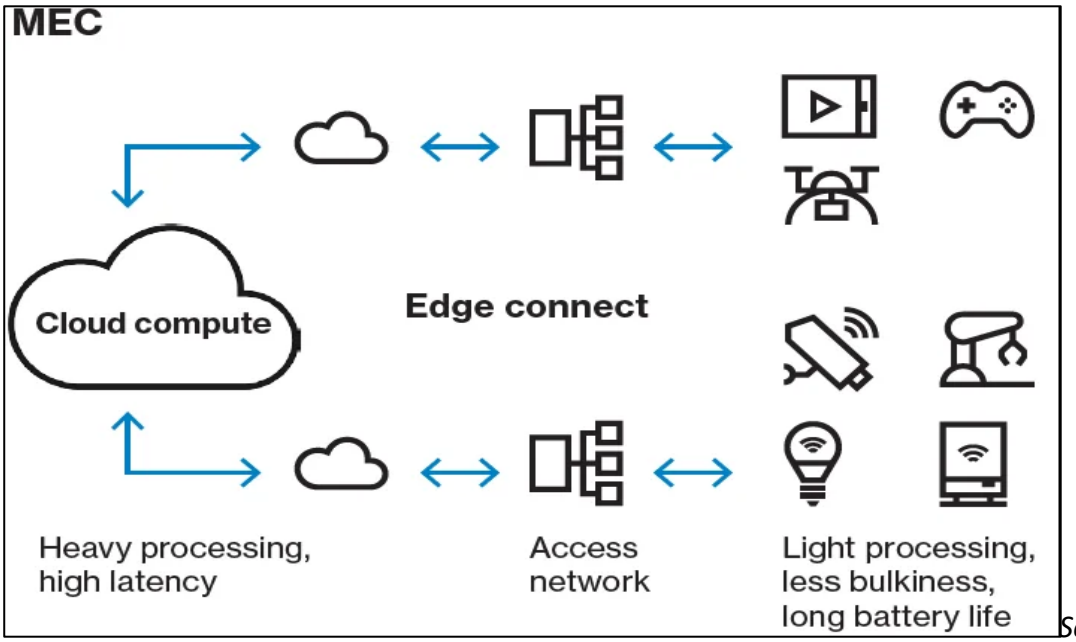

Source: Verizon

Higher data rates and C+L band

Increasing the data rates has been the primary direction for suppliers and their customers over the last decade. Development of coherent transport systems enabled rapid progression from 100G systems, introduced a decade ago, to 400G and even 800G data rates per single wavelength.

More complex modulation formats, such as 16-QAM, enabled an 8x increase in data rates to 400/800Gbps, while using optical components limited to a symbol rate of 65/90 Gbaud. New 4th and 5th generation systems, shown in Figure 1-3, will require modulators and receivers operating at 130/180Gbaud, which are becoming available. Researchers are reporting that optics which can run at speeds as high as 260Gbaud and even 300Gbaud seems to be within reach.

However, the optics operating at 130Gbaud requires wider spectral channels. The standard 100GHz spacing (fixed grid) between the DWDM channels will not be compatible with the next generation transmission systems. Use of wider spectral windows per channel (flex-grid) will be required, reducing the number of DWDM channels inside the C-band, centered around 1550nm. Extending the spectrum of DWDM systems to longer wavelength 1565-1625nm (the L-band), is becoming necessary.

The L-band is widely used in Japan and by many submarine and data center interconnect (DCI) systems, but it is a novelty for service providers in Europe. One leading European operator says

it is staying with C-band for now and perhaps will move to extended C-band. The CSP is fiber rich and lighting a new fiber pair is deemed more attractive than adding the L-band. A second CSP that is also fiber rich does expect to use the L-band in the future and is exploring different space division multiplexing approaches.

Figure 1-3: Industry roadmap for coherent DWDM optics

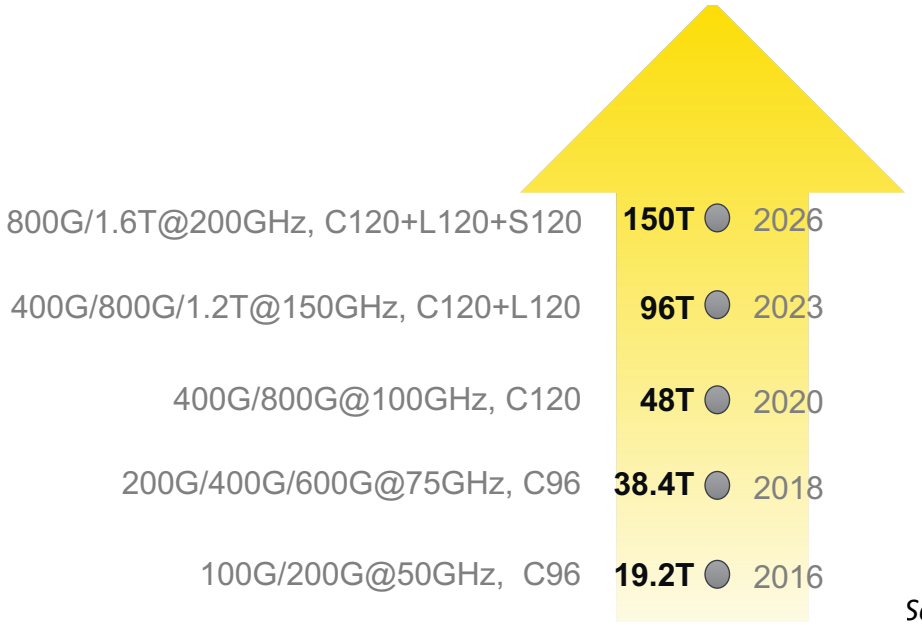

Source: Huawei

Colt reported a very positive experience with lighting up the L-band in their networks in Europe earlier this year. British Telecom is also looking at systems operating in L-band, but they are concerned about the availability of components. If the number of suppliers is limited, the prices may be higher. For example, there are no pluggable coherent DWDM transceivers designed for the L-band, at least not yet.

The cost of transceivers is only one part of the total cost of DWDM transport hardware. Optical amplifiers, such as EDFAs, and ROADMs also make a significant contribution to the overall cost. Supporting the L-band requires either a separate EDFA or a more complex amplifier, which can support both C and L bands.

Limiting system operation to just the C-band and adding more fiber has proven to work well for the submarine system deployed by Subcom in 2018-2022, as shown in Figure 1-4. These systems were probably based on 100/110 DWDM channels of 200G optics to reach 20-22Tbps/fiber capacity.

Space Division Multiplexing (SDM) refers to use of high-count fiber cables now and multi-core fibers in the future. Subcom deployed cables with 24 fibers, enabling up to 500Tbps cable capacity. However, continuing to add fibers to submarine cables is problematic. Use of multi-core

fibers, higher data rate optics and C+L band are the most likely directions for future submarine systems.

Figure 1-4: Growth in capacity per fiber in sub-marine transport systems

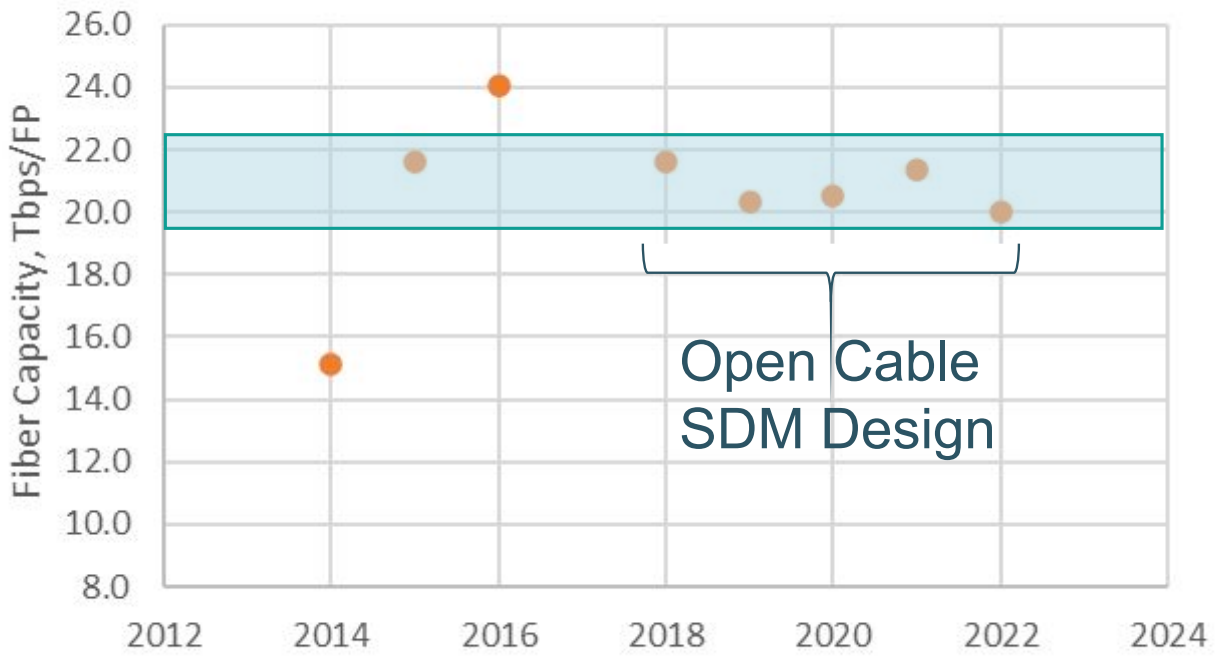

Source: Subcom

Adding more fiber is also very costly for submarine and long-distance terrestrial systems, but metro and access networks are expected to use very high-count cables. This will separate the evolutionary roadmaps for these two main types of DWDM systems:

- Metro and Access DWDM will stay within C-band and use less complex pluggable optics, as discussed below.

- Long-Distance and submarine systems will adopt higher speed on-board (non-pluggable) DWDM optics and will take advantage of the C- and L-bands now and the S-band in future.

Pluggable DWDM optics

10G DWDM pluggable SFP+ and XFP transceivers have been deployed by CSPs for the last two decades. Higher speed 100G coherent DWDM pluggable CFP transceivers were introduced in 2014-2015 and found good acceptance in the market. The CFP2 form factor has already become a new standard for 100G, 200G and even 400G coherent DWDM modules by now.

Adoption of pluggable coherent DWDM transceivers helped to reduce the cost and power consumption of DWDM optical transport systems. Competition among suppliers of CFP2 transceivers resulted in steeper price declines and accelerated innovation, as illustrated in Figure 1-5.

Figure 1-5: Improvements in cost and power consumption of coherent DWDM transceivers

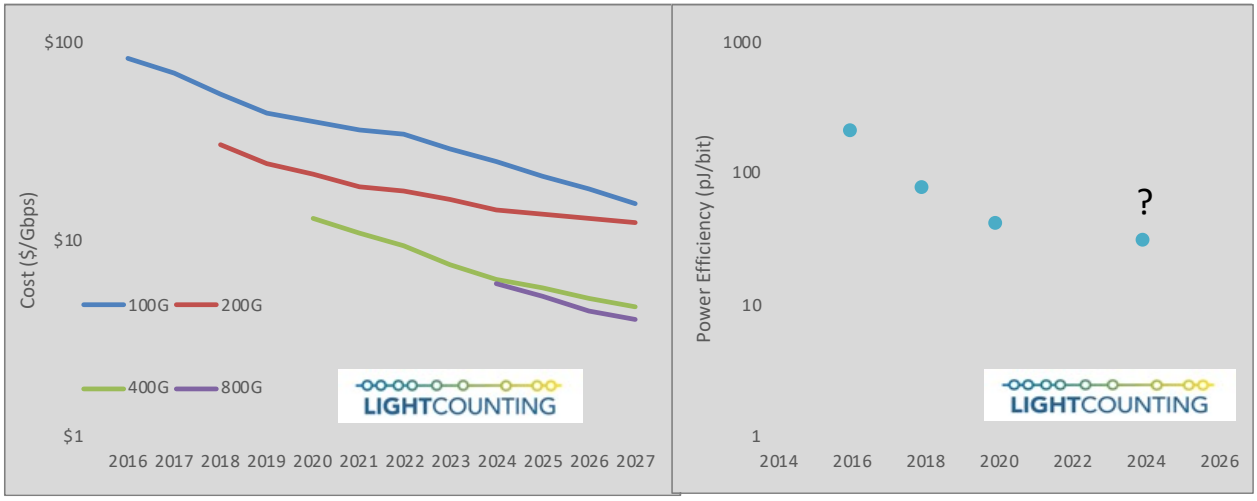

Source: LightCounting

The figure also illustrates improvements in power efficiency, but it is unclear if the trend observed in 2016-2020 will extend to 2024-2026. Power consumption of DSPs may continue to decline, but many analog ICs used in these modules may consume more power due to higher data rates. This includes the SerDes of DSPs, modulator drivers and electronics of the coherent receivers. Future pluggable modules may use two DWDM channels instead of one: 2x800G for a 1.6Tbps module, for example. All these suggests that future reductions in power consumption may be limited.

A majority of the CSPs, interviewed by LightCounting, expect that network automation and flexibility, enabled by ROADMs and OXCs, will be the primary drivers for reductions in the cost and power consumption of future DWDM transport systems.

Section 2: 400G ZR/ZR+ and IP-over-DWDM

The communications service providers (CSPs) have embraced and benefited from several developments originating from the internet content providers (ICPs). “Cloud companies” is a closely related term and LightCounting uses these two terms interchangeably.

These include using merchant silicon, adopting open platforms, and promoting disaggregated designs. The CSPs want to reduce equipment cost and benefit from greater choice. CSPs want to move away from proprietary hardware and software. That said, CSPs continue to favor using equipment from leading system vendors due to long-established relationships especially if the equipment delivers what they consider a performance benefit.

One European operator was asked by LightCounting whether they favor white boxes. Their response was that it depends where in the network. At the edge of the network such as with Open RAN there may be cost benefits but for the core network it doesn’t need to be open and it makes more sense to use a big core router connected to the optical network. “It’s not like Google where they are trying to do one thing, we are doing a myriad of things,” it said.

For the telecom operators’ optical networking layer, the trend for greater openness is reflected in the adoption of open line systems, interest in coherent pluggable optics and the promise of lower cost, and the re-emergence of IP over DWDM, where IP routers have visibility into the optical layer and oversee multi-layer optimization.

IP over DWDM is not a new concept having been around for at least two decades. However, several factors have emerged that are causing the CSPS to re-examine IP over DWDM. These factors include:

- The emergence of pluggable coherent optics at 400G which started with the ICPs driving the development of 400ZR coherent optics to link equipment between their data centers. Such coherent pluggables exist in form factors that match IP routers’ client-side ports, while versions with optical performance superior to ZR – ZR+ and extended mode pluggables – are more suited to telecom optical networks that include ROADM stages.
- CSPs have cost, space and power constraints and want to simplify their networks including removing unnecessary equipment. Adding coherent modules directly to IP routers rids them of separate muxponder/ transponder cards or whole DWDM platforms as well as client-side optics to interface the two.

However, moving to IP over DWDM has its challenges, as discussed later in this section.

400ZR/ZR+ coherent pluggables

The OIF 400ZR standard has been a key catalyst for the CSPs' renewed interest in IP over DWDM. Google, Meta, Microsoft and Alibaba all wanted a coherent module with just enough performance to link data center equipment up to 120km apart which accelerated the development of 400ZR pluggables. Hyperscalers' adoption also promises significant volumes, far greater than for telecom applications and hence lower-cost coherent pluggable optics in a QSFP-DD form factor. It is these promises that has attracted the attention of the CSPs.

The OIF 400ZR standard has resulted in a low-cost, interoperable, pluggable coherent design whose specification, the 400ZR Implementation Agreement, was published by the OIF in early 2020.

The 400ZR supports a single baud rate (60 gigabaud), a single modulation scheme (dual-polarization 16-QAM) and carries Ethernet frames only. The 400ZR standard also supports two-channel widths: 75GHz and 100GHz, while the forward error correction scheme used is concatenated FEC.

ZR+ extends the optical performance of ZR to expand the reach and may support other data rates such as 100G, 200G, 300G as well as 400G. As such it can have proprietary performance.

Table 2-1: Specifications of 400ZR, ZR+ and ITU/OpenROADM/CableLabs 400G transceivers

Mode	400ZR	400ZR+	ITU/ OpenROADM/ CableLabs	
Data rate(s) - Gigabit/s	400	400	400	200
Symbol rate - GBd	60	60	63	31.5
Modulation	16-QAM	16-QAM	16-QAM	16-QAM
Application	DCI and dark fiber	Metro	Metro ROADM	Fixed Grid Metro ROADM
Client formats	Ethernet	Ethernet	Ethernet, OTN	Ethernet, OTN
o/p power - dBm	up to +4dBm	up to +4dBm	up to +4dBm	up to +4dBm
Channel spacing - GHz	75, 100	75, 100	75, 87.5, 100	50
FEC	CFEC	oFEC	oFEC	oFEC

OpenZR+ is an MSA supported by companies including Cisco, Juniper Networks, Arista, Fujitsu, Lumentum and Innolight to ensure interoperability. OpenZR+ supports 100-400 Gigabit Ethernet (GbE) traffic and uses a more powerful forward error correction scheme known as open FEC (oFEC). However, OpenZR+ does not support OTN.

OTN is however supported by the OpenROADM standard which also has a reach of 500km. Shown in Table 2.1 above are the 400ZR, 400ZR+ and OpenROADM modes supported by Ciena's latest Universal coherent QSFP-DD module that was demonstrated at ECOC 2022 in September.

CSPs want to support OTN as well as Ethernet traffic and want superior optical performance to go through several ROADM stages. This has led pluggable coherent suppliers to extend the optical performance even further by improving the module's output power and forward error correction scheme to enhanced the signal's ability to go through multiple ROADM stages. The extended modes are again custom and offer the system vendors and module suppliers a way to differentiate their pluggables performance. But clearly for such performance to be exploited, the specific module type must be at both ends of the line.

Figure 2-1: Applications of 400ZR and other coherent solutions.

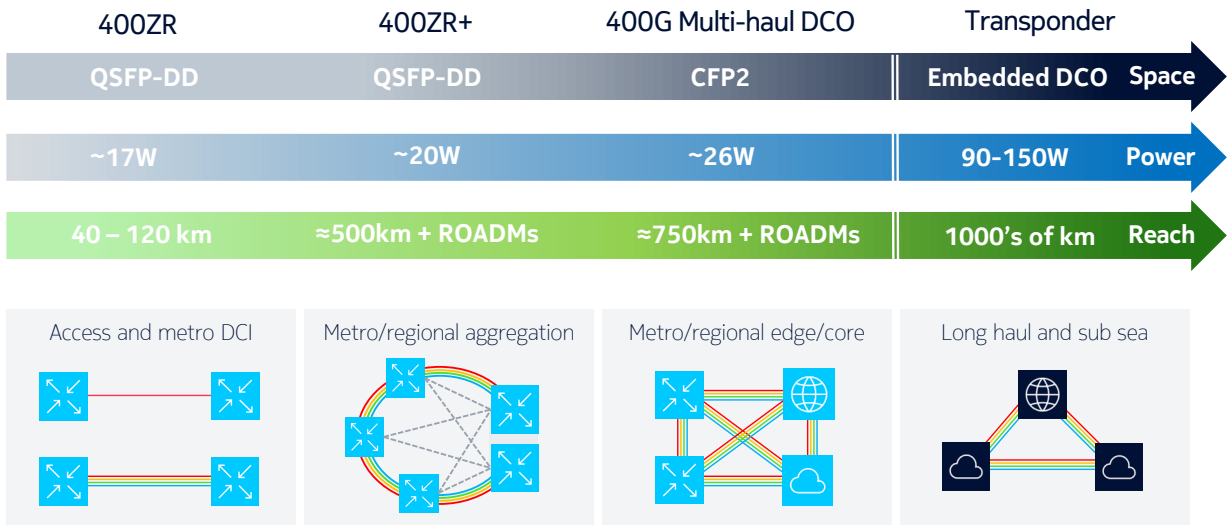

Source: Nokia

Figure 2-1 above illustrates applications of 400ZR/ZR+ and extended performance (or multi-haul) CFP2 DCOs, but it also shows a significant market opportunity for higher performance pluggable and embedded (non-pluggable) optics, designed for long-haul and subsea networks.

IP over DWDM

A transponder or transport terminal equipment linking the IP router and the optical line system is typically used to connect IP traffic to the DWDM optical layer. This also requires short-reach 'grey' optics connecting the router to the network terminal, as shown in Figure 2-2.

Figure 2-2: Connecting IP to optical using separate coherent transponders and grey optics

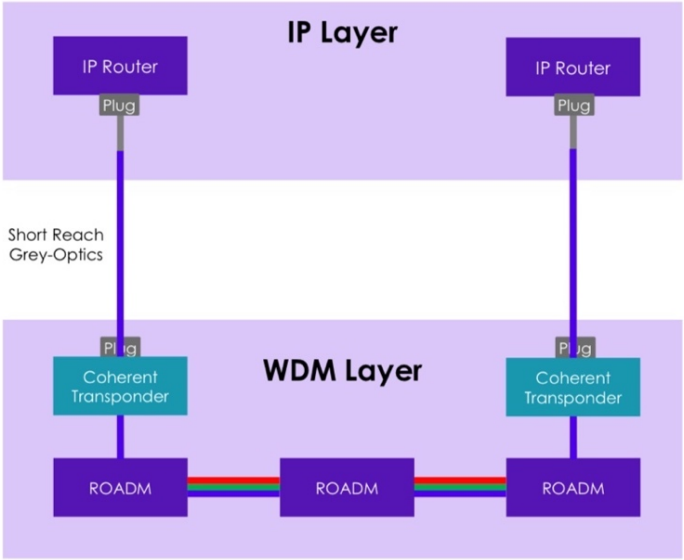

Source: BT

A common definition of IP over DWDM is the addition of line-side optics directly onto the router. This removes the need for grey optics and separate network terminals, as shown above.

Adding coherent optics to a router has been less than ideal. Adding a bespoke coherent interface card to the router or, with the advent of coherent modules, inserting a pluggable directly onto a router's port, have both been unattractive options: the coherent interface card typically occupies a complete router slot or the pluggable has been a CFP2-DCO, a bigger form factor than the QSFP-DD used for client-side optics.

But with QSFP-DD coherent pluggables, line-side optics now fit in the same router ports as client-side optics. This saves power, space and cost compared to inserting a coherent interface card or a larger pluggable into the router.

Another version of IP over DWDM that has emerged is referred to as routed optical networking, or hop-by-hop, and is promoted by Cisco Systems. Like IP over DWDM, routed optical networking also involves placing coherent optics onto the router. But if there is a difference, it is that routed optical networking places the emphasis of intelligence at the IP layer and within the router. The optical layer is used more for point-to-point links. Several reasons are cited for a routed optical networking approach:

- The low cost of ZR and ZR+ pluggable optics

- Placing the intelligence at the IP layer simplifies multi-layer network management, orchestration, and automation.

- The bulk of traffic is now IP and with circuit emulation, other non-IP forms of traffic can be carried over IP.

The argument against routed optical networking is that optical bypass using ROADMs is more efficient than electrical bypass involving the router passing on traffic. Optical bypass is also a more power efficient, greener approach.

However, proponents of routed optical networking note that the capacity of IP routers is such that they can now deal with such electrical bypass and whereas optical speed upgrades result in many optical paths being lightly filled, IP routers more efficiently match traffic to capacity.

LightCounting uses the term IP over DWDM to also include routed optical networking unless the routed optical networking is specifically being discussed.

Adopting an IP over DWDM approach has consequences though:

- There are transport functions associated with the transponder or the pluggable module that now need to be managed via the router. What was previously the purview of the optical network layer is now associated with an IP platform.

- Adding the coherent optical interface must not constrain the IP router. The aim is to be able to use the most advanced coherent pluggables available. But such pluggables have a higher power consumption than the same form factor client-side versions. The IP router must supply sufficient power and dissipate the heat from these higher-power line-side optics.

- Inevitably there will be some restrictions on optical performance compared to a dedicated DWDM box. It is then up to the CSP whether it can tolerate such limitations given the other benefits that IP over DWDM offers.

What CSPs want

There will always be CSPs that have no interest in adopting IP over DWDM. Hellenic Telecommunications Organisation (OTE Group) gave a talk at NGON and DCI 2022, held in Barcelona in June, describing the geographic requirements of Greece which is comprised of many islands. The most important aspect is ensuring the resiliency of its network's optical backbone that links the islands. OTE has adopted a simple but resilient DWDM network and says this meets its requirements; it does not foresee a need to adopt IP over DWDM.

But CSPs are interested in IP over DWDM because of the potential of exploiting the choice and variety of pluggable coherent optics fitted on routing equipment without reducing the overall port count and simplifying the network by removing equipment, saving power, space and cost. One operator has also mentioned the benefit of greater reliability by reducing the number of network elements in line.

But the CSPs must consider several issues before adoption of IP over DWDM in their networks:

- The geographical and reach requirements of their networks.
- The cost benefits of IP over DWDM and whether coherent pluggables meet their optical performance requirements.
- How much development effort is required to use multiple sources of coherent modules and enable the management of the optical layer via the IP router; the orchestration and automation aspects of IP over DWDM.
- The amount of service traffic a CSP must carry besides IP or Ethernet packets.
- Does the CSP have separate operational teams for IP and optical? This can be a significant barrier to embracing IP over DWDM even if the CSP's research arm is convinced by the technology.
- The alignment of coherent optics and client-side optics at 400 gigabits promises at least a 5-year window of deployment. Is this a one-off alignment or will it continue at 800 gigabits and 1.6 terabits? Will they meet the same reach that 400-gigabit coherent pluggable optics achieves? Will they have different development cycles to the equivalent client-side optics form factors? Simply put, will the alignment of coherent and grey optics continue to ensure IP over DWDM remains attractive?

At ECOC 2020, BT published a paper exploring the possible capital expenditure benefits of 400ZR and a hop-by-hop architecture at one extreme, compared to traditional 400-gigabit long-haul transponders and optical bypass at the other extreme. ZR+ was also investigated as siting in between the two extremes. Note that BT's UK network does not have excessively long spans.

BT modeled four scenarios, shown in Figure 2-3: IP routers using 400ZR optics only without any fiber amplification, a hop-by-hop scenario (A), 400ZR or ZR+ added with amplification and WDM filters (B), 400ZR+ used in a ROADM network (C) and Scenario D which uses traditional 400-gigabit WDM.

Figure 2-3: Cost analysis of IP over DWDM deployments

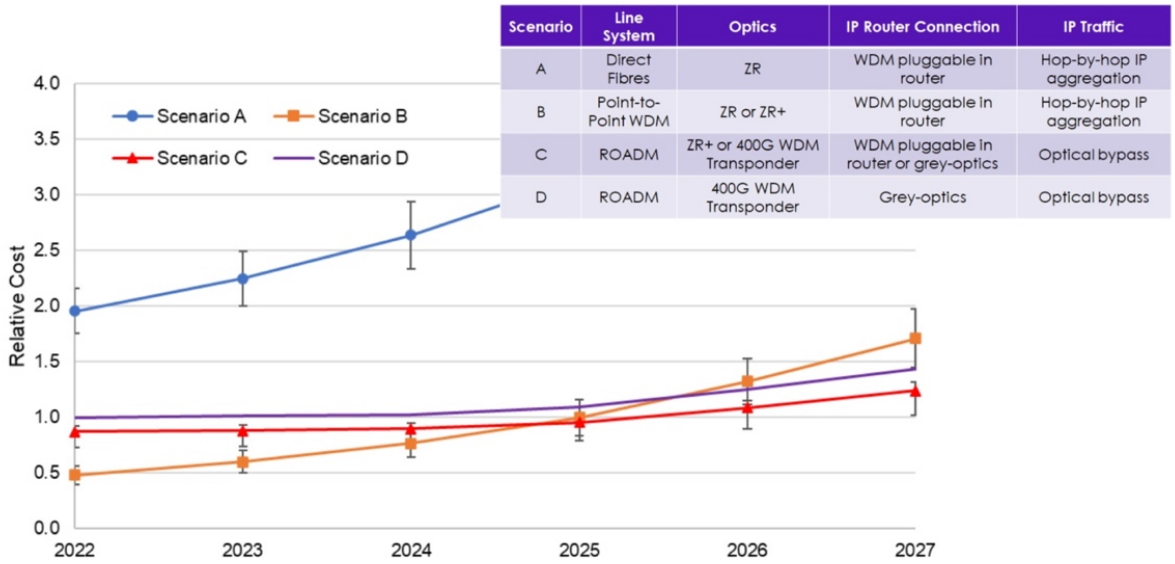

Scenario	Line System	Optics	IP Router Connection	IP Traffic
A	Direct Fibres	ZR	WDM pluggable in router	Hop-by-hop IP aggregation
B	Point-to-Point WDM	ZR or ZR+	WDM pluggable in router	Hop-by-hop IP aggregation
C	ROADM	ZR+ or 400G WDM Transponder	WDM pluggable in router or grey-optics	Optical bypass
D	ROADM	400G WDM Transponder	Grey-optics	Optical bypass

Source: BT

BT found that the low cost of ZR optics favored the use of router hop-by-hops as traffic was brought into a hub. But hop-by-hop was less favorable as traffic grew and here, optical bypass and ROADMs made more sense. Here ZR+ optics was an option and in certain situations traditional 400G transponders were needed.

BT has not updated the modeling experiment using the latest extended mode QSFP-DD modules which have greater output powers (0+dBm versus -10dBm used in 2020) but believes the cost dynamics of ZR+ and ROADMs will further improve.

In BT's latest ECOC 2022 talk, the operator reported on demonstrations of ZR+ and XR Optics pluggables in its network. Its conclusion is that the two technologies are opening up new opportunities for CSPs to deploy IP over DWDM. However, BT's router network is much smaller than their DWDM transport system. Adding more routers is the most expensive part of the network upgrades and expanding the optical layer is often the most cost effective solution for enabling new services.

In summary:

- Network flexibility and automation is the top priority for the service providers in China, Europe, Japan and North America, interviewed by LightCounting. Metro and access networks will require the most upgrades to keep up with traffic growth.

- CSPs will continue to rely on higher data rate systems to improve the cost and power consumption efficiency of their future DWDM systems, but it will be a gradual process. 100/200G DWDM will be widely adopted in access and aggregation networks, which rely on 10G today. New metro and long-haul telecom networks will move to 400G and beyond, but demand for 100/200G ports will remain solid for the next 5 years.

- Deployments of high fiber count cables and use of C+L bands are also important. Use of multi-core fibers will be limited to sub-marine systems.

- We expect that a separate optical transport layer will remain the most critical component of DWDM networks for CSPs and deployments of IP over DWDM will be limited to a few selected cases.